REVISIONS						
REV	DESCRIPTION	ECN	DATE	DFTSMN	CHK	APPR
01						
02						

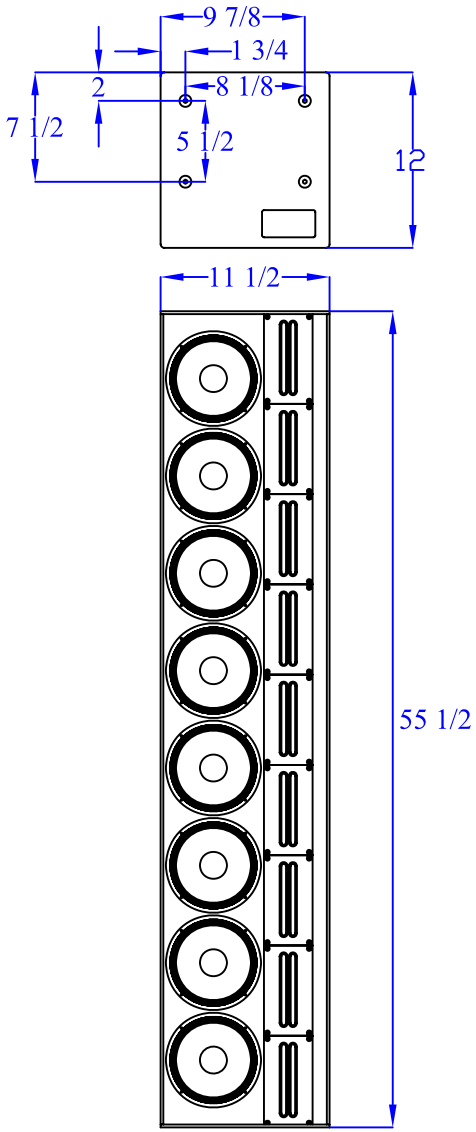

FRONT

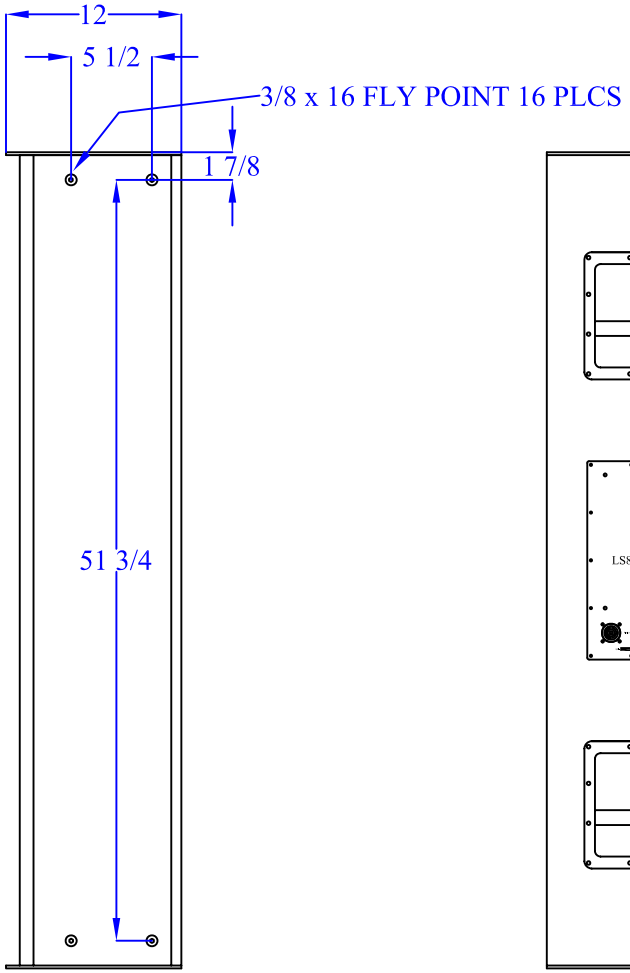

SIDE

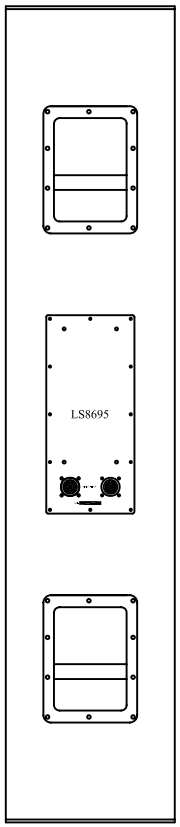

BACK

UNLESS OTHERWISE SPECIFIED

1.DO NOT SCALE DRAWING
2.DIMENSIONS ARE IN INCHES

TOLERANCE
X/X = ±1/64
.XX = ±.03
.XXX = ±.010
ANGULAR ±.5°

FINISH √

MATERIAL
AS SPECIFIED

FINISH
AS SPECIFIED

DRAWN BY: P. SPURLOCK DATE 06/22/05

CHECKED BY

APPROVED BY

SLS LOUDSPEAKERS
1650 W. Jackson
Ozark, MO 65721
417-883-4549 Fax: 417-883-2723

MECHANICAL SPECIFICATION

LS8695 CABINET

DWG.NO. LS8695 REV. 0

SCALE 1/1 SHEET 1 OF 1